NEWOPTO
鑫 永 诚 传 感

惠 州 市 鑫 永 诚 传 感 科 技 有 限 公 司

Huizhou Newopto Sensor Technology Co., Ltd.

产 品 承 认 书

SPEC FOR APPROVAL

客户名称 **Customer**	
产品名称 **Model Name**	**数字热释电红外传感器** **Digital pyroelectric infrared sensor**
产品型号 **Model No**	**XYC-PIR223D-S0**
承认编号 **Approval No**	
编制日期 **Edit Date**	**2020-06-01**

核准 Approval	**审核 Check**	**编制 Edit**
吴伟	王宏建	刘承宇

客户确认(Customer Signatures)		

地址：惠州市惠城区潼侨镇宏村宏川路鑫永诚科技园

电话(Tel):0752—7987222　　网址(Web site):http//www.xycgd.com

传真(Fax):0752—7987000　　邮箱(E-mail):wuwei@xycgd.com

XYC-PIR223D-S0 数字热释电红外传感器是将传统热释电红外传感器的敏感元与信号处理芯片集成化设计 ,将敏感元与 IC 芯片集成封装到传感器屏蔽罩内部，敏感元通过感应外界人体移动产生的红外信号，以差分输入的方式传送到高精度的数字智能处理芯片进行处理，信号处理完成，传感器直接输出信号，使用方便。 The XYC-PIR223D-S0 digital pyroelectric infrared sensor integrates the sensitive element of the traditional pyroelectric infrared sensor with the signal processing chip, and integrates the sensitive element and the IC chip into the sensor shield.The sensitive element transmits the infrared signal generated by the external human movement to the high-precision digital intelligent processing chip for processing by differential input.When the signal processing is completed, the will sensor outputs the signal directly , which is convenient to use.

特性 Feature

- 高精度 AD 信号处理；High precision AD signal processing
- 具有施密特 OUT 输出，抗干扰能力强；Schmidt output, strong anti-interference ability
- 低工作电压、低功耗；Low operating voltage, low power consumption

应用 Application

- 适用于各类自动照明开关；Applicable to all types of automatic lighting switches
- 适用于各类防盗报警用入侵探测器 ；Applicable to all kinds of intrusion detectors for burglar alarms
- 适用于各类智能玩具；Applicable to all kinds of smart toys
- 适用于各类智能家用电器 ； Applicable to all kinds of smart household appliances

优势 Advantages

- 品种齐全, 生产周期短, 小批量库存备货 Complete varieties, short production cycle,Prepared small batch inventory
- 严格的品质保障体系，让您使用无忧 Strict quality assurance system
- 提供全方位的技术支持服务 Provide a full range of technical support

最大额定值 Maximum Ratings

参 数 Parameter	符号 Symbol	最小值 min	最大值 max	单位 unit	备注 note
供电电压 Input voltage	V_{DD}	-0.3	4.5	V	
管脚电流 Pin current	I_{nto}	-100	100	mA	
储存温度 Storage temp	T_{st}	-40	85	℃	

工作条件（T=25℃) Working Condition：

参 数 Parameter	符号 Symbol	最小值 min	典型值 typical	最大值 max	单位 unit	备注 note
工作电压 working voltage	V_{DD}	2.7	3.3	3.7	V	
工作电流 working current	I_{DD}		10		uA	3.3V\25°
灵敏度阈值 Sensitivity threshold	V_{SENS}		110		uV	不可调节 unadjustable
工作温度 working temperature	W_{ST}	-20		70	℃	
输出 Output						
输出低电流 Output Low Current	I_{OL}	-5		5	mA	
封锁时间 Lock Time			2.3		S	不可调节 unadjustable
延迟时间 Delay Time			1		S	不可调节 unadjustable

内部框图 Internal Block Diagram：

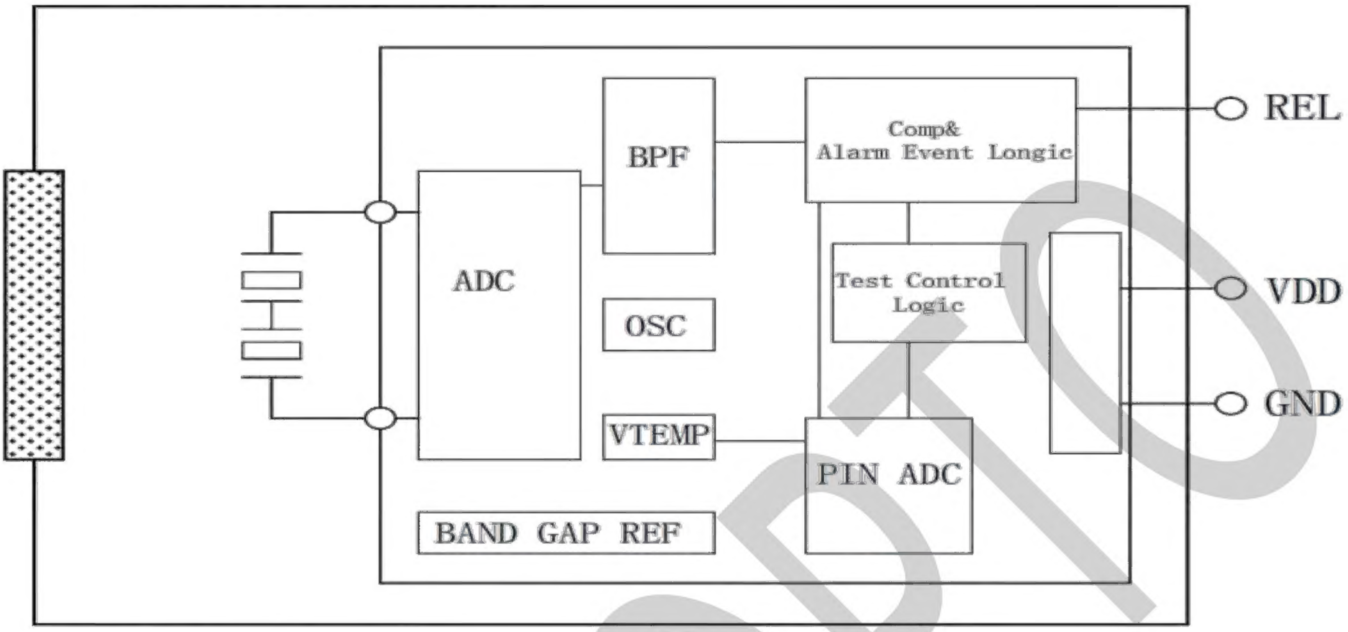

触发模式 Trigger Method：

传感器接收到的信号超过设定的阈值之后，内部会产生一个计数脉冲，当传感器再次接收到这样的信号，会产生第二个计数脉冲，当 4 秒之内产生两个计数脉冲，传感器 REL 脚输出高电平，此外接收到的信号超过比较阈值的 5 倍以上，只需要一个脉冲 REL 脚就输出高电平，输出延迟时间从最后一次有效脉冲开始计时。

When the signal received by the sensor exceeds the set threshold, a count pulse is generated internally. When the sensor receives such a signal again, a second count pulse is generated. When two count pulses are generated within 4 seconds, the sensor REL pin output high electronic level.If the received signal exceeds the comparison threshold by more than 5 times,it only needs one pulse,the REL pin will output a high electronic level.And the output delay time is counted from the last valid pulse.

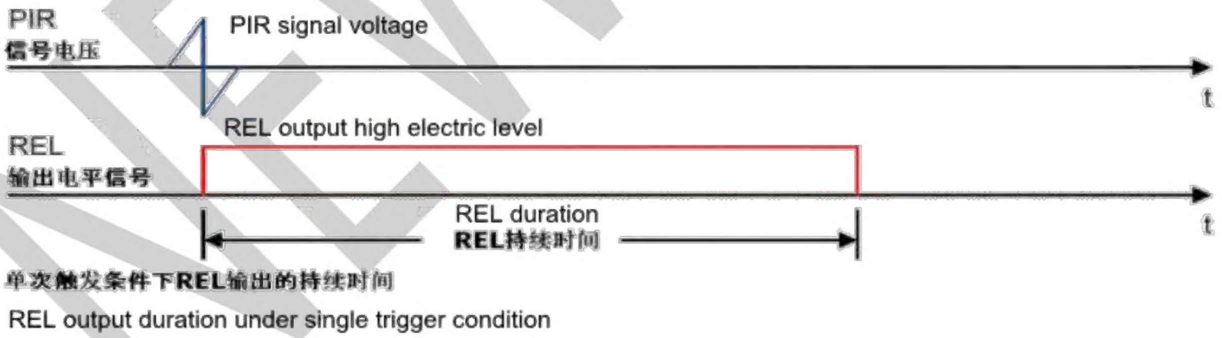

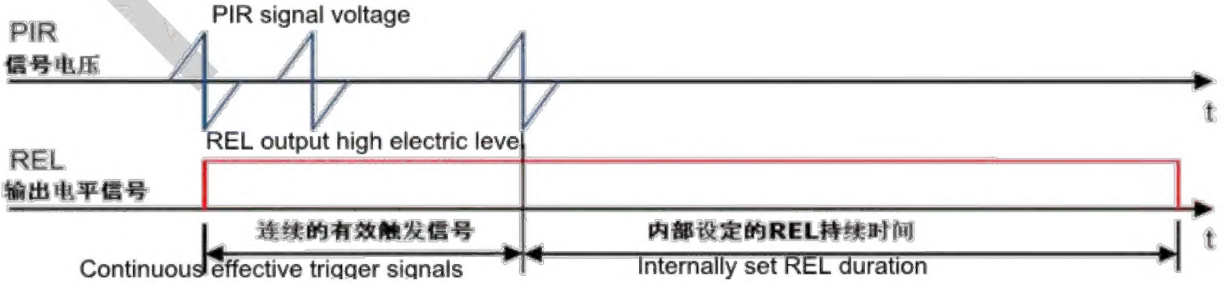

地址：惠州市惠城区潼侨镇宏村宏川路鑫永诚科技园
电话(Tel):0752—7987222 网址(Web site):http//www.xycgd.com
传真(Fax):0752—7987000 邮箱(E-mail):wuwei@xycgd.com

感应角度 Detection Angle：

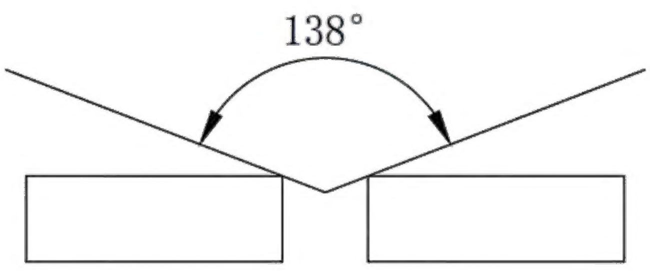

X-X

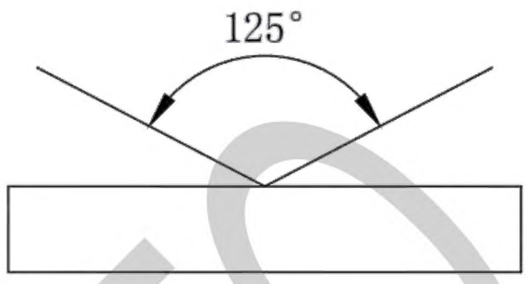

Y-Y

产品外形尺寸（MM)Product Dimension：

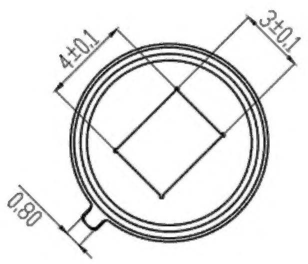

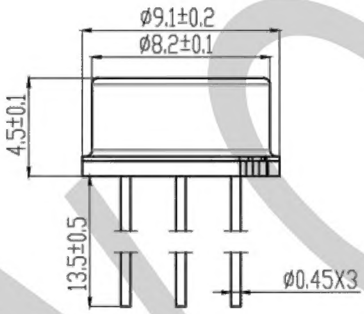

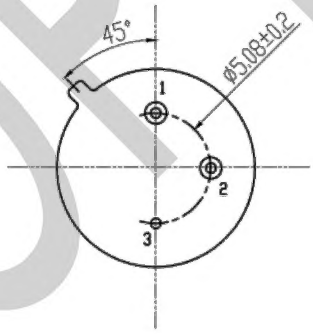

TOP VIEW
(FIGURE A)

SIDE VIEW
(FIGURE B)

BOTTOM VIEW
(FIGURE C)

(mm)

管脚定义： pin description：	
1	VDD 传感器供电脚 VDD Power supply pin
2	REL 传感器输出脚，输出 TTL 高低电平 REL Output pin, output TTL high and low electric level
3	VSS 电源地 GND VSS Power ground GND
备注 note	

地址：惠州市惠城区潼侨镇宏村宏川路鑫永诚科技园

电话(Tel):0752—7987222
网址(Web site):http//www.xycgd.com
传真(Fax):0752—7987000
邮箱(E-mail):wuwei@xycgd.com

信号特性 Signal Feature：

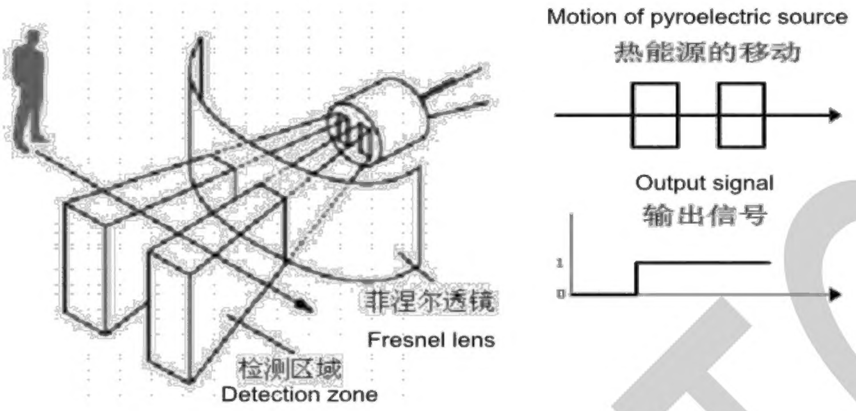

窗口材料的可接收通过波长 Window material receiving wavelength range：

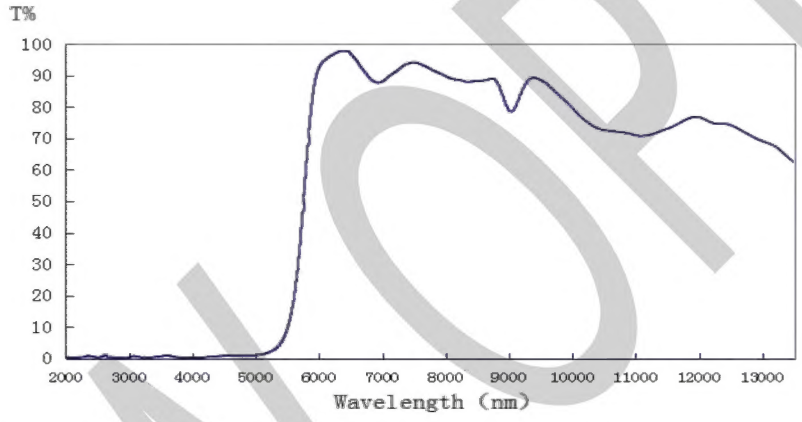

注意：图表所示为典型的 5.5um 红外滤光片参考图，曲线是红外线通过率的平均值。

Note: the chart shows a typical 5.5um infrared filter reference chart. The curve is the average of the infrared pass rate.

典型应用电路 Typical application circuit：

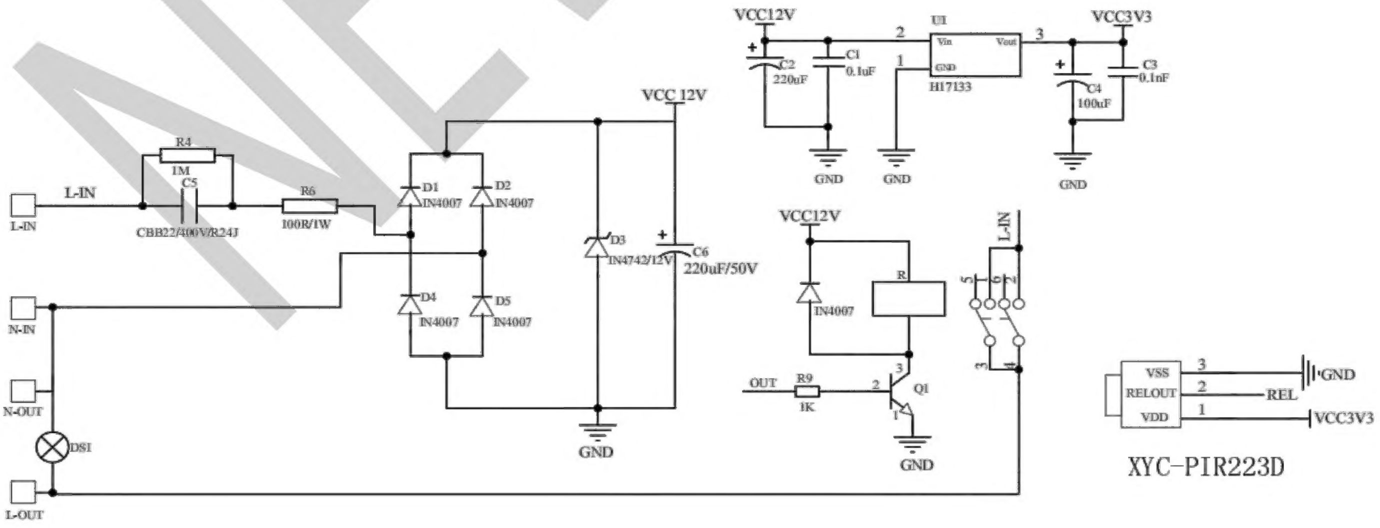

地址：惠州市惠城区潼侨镇宏村宏川路鑫永诚科技园
电话(Tel):0752—7987222
网址(Web site):http//www.xycgd.com
传真(Fax):0752—7987000
邮箱(E-mail):wuwei@xycgd.com

焊接 Soldering：

焊接过程中的不慎操作将会引起产品的损坏，请务必注意。焊接过程中应避免对产品支架或封装部分施加压力。焊接时，请保证焊接位置与传感器底部有一定的距离，该距离因不同的焊接方法而有所不同，请参照以下推荐焊接条件。

Careless operation during soldering will cause damage to the product,please be careful. Please avoid put pressure on the product bracket or package part during soldering.When soldering, please ensure that the soldering position has a certain distance from the bottom of the sensor. This distance varies with different welding methods. Please refer to the recommended welding conditions below.

推荐焊接条件 Recommended Soldering Conditions

<table>
<tr><td colspan="2">焊接模式
Soldering Mode</td><td>固定形式
Fixed Form</td></tr>
<tr><td rowspan="3">手工焊接
manual soldering</td><td>烙铁温度
Soldering iron temperature</td><td>240-280℃</td></tr>
<tr><td>焊接时间
Soldering time</td><td>2-4 秒
2-4 seconds</td></tr>
<tr><td>焊接位置
Soldering position</td><td>大于 3mm (从焊点到底座)
More than 3mm(from solder joint to base)</td></tr>
<tr><td rowspan="4">锡炉焊接
Tin stove welding</td><td>预热
Preheat</td><td>最高温度 100℃ 不超过 60 秒 Highest temperature 100 degree,not more than 60 seconds</td></tr>
<tr><td>浸焊温度
Dip soldering temperature</td><td>最高 280℃
Max 280 degree</td></tr>
<tr><td>浸焊时间
Dip soldering time</td><td>不超过 5 秒
Not more than 5 seconds</td></tr>
<tr><td>焊接位置
Soldering position</td><td>大于 3mm (从焊点到底座)
More than 3mm(from solder joint to base)</td></tr>
</table>

使用注意事项 Caution：

感谢您使用惠州市鑫永诚传感科技有限公司的 PIR 系列产品，为增进您对我司产品特性的了解，也为方便您快速掌握产品的基本操作，为尽量减少或避免因人为等因素造成不必要的产品损坏，使其能够更好的为您的生产服务，特针对使用过程中的一些规范使用作相应说明，同时即使是同一规格 PIR，在实际应用领域其可靠性与整体系统设计水平、作业方式、使用条件均相关。本使用说明不可能涵盖客户使用过程中可能碰到的所有问题，由此带来的不便，敬请谅解！

Thanks for using Huizhou Newopto Sensor Technology Co.,Ltd PIR series products.In order to enhance your understanding of our products characteristics and avoid unnecessary damage due to man made factors,we provide corresponding operation standard instruction.At the same time,even if you are using the same specification PIR,its reliability is related to overall system design level,operation mode and use condition.This instruction couldn't cover all questions customers may meet during using.We apologize for any inconvenience caused sincerely.

- 产品声明 Product Declaration
  - 传感器的出厂参数是在标准黑体和相关参数测试条件下经过一分钟稳定时间后测试所得。
  - The factory parameters of the sensor are tested after one minute stabilization time under standard blackbody and related parameter test conditions.
  - 使用本产品之前，请贵司务必预先进行测试，以便确认是否适合使用目的，产品介绍的用途并不保证不抵触任何专利，有关 PIR 产品的进出口法律责任应由客户担负，请预先查清每个国家或地区的有关规定，产品可能会因性能提供或规格参数改变等缘故，恕不经预告更改，我们要求量产前签订正式的产品规格书
  - In order to confirm the product is right for using purpose , pretest is necessary before use . We don’t guarantee the product application introduction don’t contravene any patent. The corresponding import and export legal responsibility should be taken by customers. Please verify relevant provision in each country and district beforehand. We may change specifications from time to time in the interest of product development,without prior notification or public announcement.We require formal product specifications to be signed before mass production.
- 储存 Storage
  - 在温度不高于 30℃，湿度不高于 60%RH 的条件下，产品保存期限为 6 个月。将产品保存在密封的容器中并附带干燥剂可以在一定程度上延续产品的储存日期。不良的储存条件会导致产品引脚的腐蚀或产品性能的改变。
  - Under the storage conditions of 30℃ or less and humidity less than 60%RH, the storage period is 6months. Store the products in sealed container with moisture absorbent could prolong the storage time to a certain extent. Bad storage conditions may cause the product pin corrode or characteristics change.
- 静电 Static
  - 静电和电涌会导致产品特性发生改变，例如正向电压降低等，如果情况严重甚至会损毁产品，所以在使用时必须采取有效的防静电措施。所有相关的设备和机器都应该正确的接地，同时必须采取其他防静电和电涌的措施。使用防静电手环，防静电垫子，防静电工作服，工作鞋，手套，防静电容器，都是有效的防止静电和电涌的措施。
  - Static and electric surge would change the product features,such as decreasing forward voltage or damage the products.Please make sure adopt effective anti-static measures. All the relative devices and machinery must be properly grounded.And please use anti-static wrist bands,anti-electrostatic gloves, anti-electrostatic containers at the same time to prevent static and electric surge.
- 设计建议 Design Suggestion

- 设计产品时请注意传感器的窗口方向，结合菲涅尔透镜来达到较理想的探测角度。
- Please pay attention to the window direction of the sensor when designing the product, and combine the Fresnel lens to achieve a better detection angle.
- 传感器的距离和背景温度、移动中的目标温度、菲涅尔透镜、环境温度、放大器放大倍数设置均有直接关系，使用时需综合考虑各参数。
- The sensor detection distance is related to the background temperature, the moving target temperature, the Fresnel lens, the ambient temperature, and the amplifier magnification setting.It is necessary to consider all parameters when using.

■ 其它 Others

- 传感器采用金属外壳密闭封焊而成，为保证器件的气密性，使用过程中不建议对引线进行弯折，弯折可能会破坏玻璃和金属封接部位的气密性，造成器件漏气。如果需要弯折使用，请使用工具辅助，并保证折弯过程中引线根部不受力。请保证折弯点与传感器底座之间有 3mm 以上的距离。使用过程中不可轴向扭动引线。
- The sensor is sealed by a metal casing. In order to ensure the airtightness of the device, it is not recommended to bend the lead during use. Bending the lead may damage the airtightness of the glass and metal sealing parts, cause air leakage. If you need to bend,please use tool assist and ensure that the root of the lead is not stressed during the bending process. Please ensure the distance between the bending point and sensor base is more than 3mm.Do not twist the leads axially during use.
- 传感器窗口镜片为半导体硅片经特殊材料真空镀膜的滤光片，使用时不能用手或硬物直接接触窗口，如滤光片有脏污，可用绒布沾无水乙醇适度擦拭。
- The sensor window lens is a semiconductor wafers filter vacuum coated by special materials. Please don't touch the window with your hands or hard objects when using. If the filter is dirty,please wipe it with absolute ethanol by lint-free cloth.
- 传感器应避免机械冲击，频繁、过度振动会导致传感器内部敏感元断裂，使用时需轻拿轻放。
- Please avoid mechanical shock for the sensor. Frequent or excessive vibration will cause the sensitive element break.

NEWOPTO